G.W. SPECS. REV. NO.GSA-2224

NOTE: EXCEPT THOSE AS PROVIDED BY REPORT TO DATE, ALL THE INFORMATION, THE INFORMATION SHOWN HEREIN

**Alexis FIRE EQUIPMENT CO.**
P.O. BOX 540, ALEDO, ILLINOIS 61412

| | | |
|---|---|---|
| SCALE: 1/2" = 1' | DATE: 07/26/02 | DRAWN BY: JOSH MCCLURG |
| GSA | | |
| — | | |
| REVISION # – | REVISION DATE — | DWG. NO. GSA-24 |
| DESC. MIDSHIP PUMPER | | CONTRACT # – |

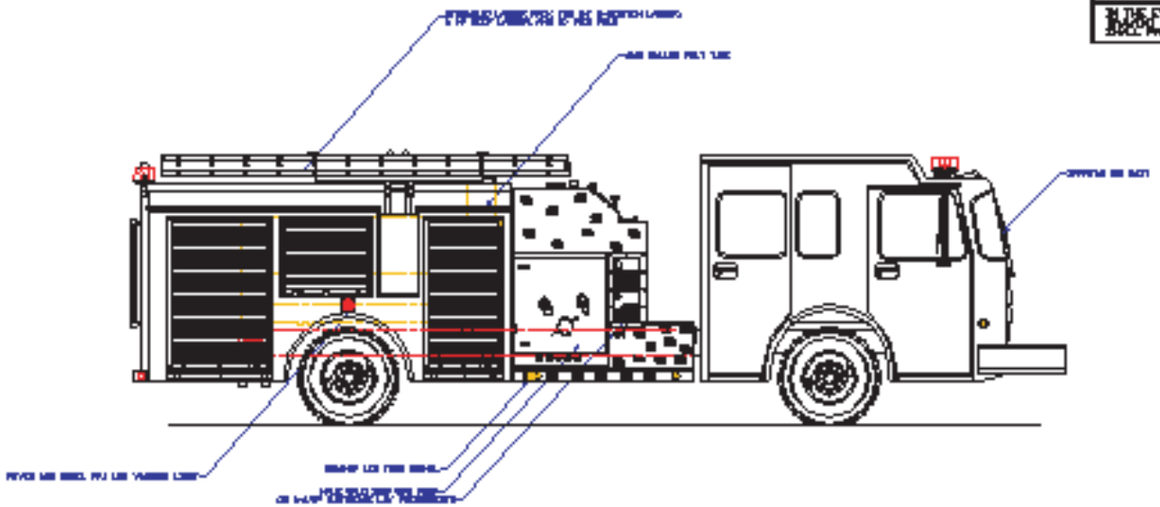

## COMPARTMENT DIMENSIONS
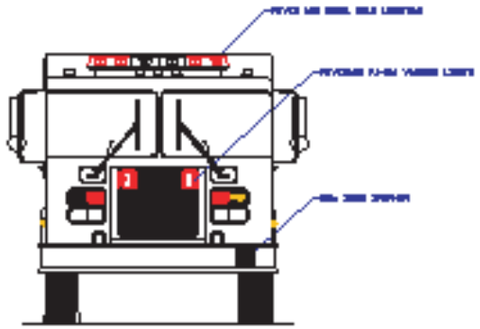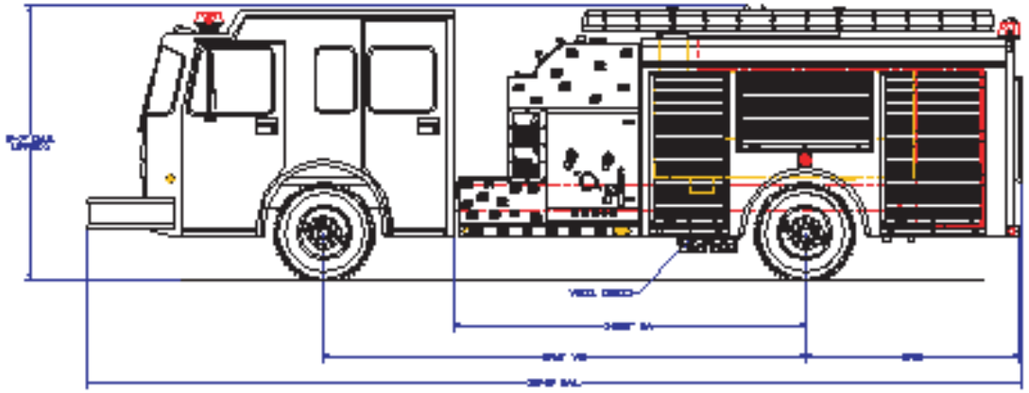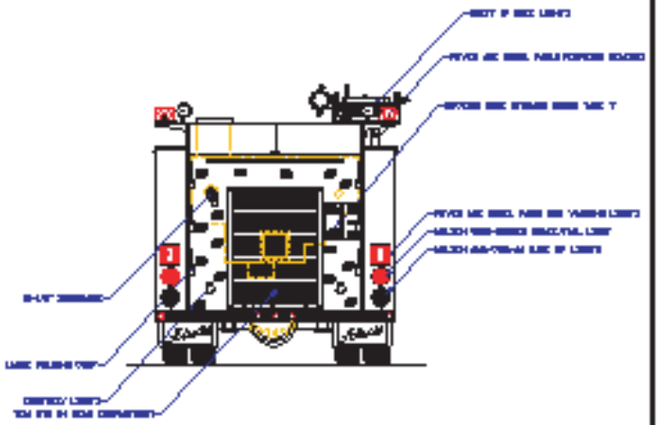
| COMP. # | DOOR OPENING SIZE | COMPARTMENT INTERIOR SIZE |
|---|---|---|
| L1 & R1 | 69" WIDE X 69" HIGH | 91" WIDE X 63.7" HIGH 84" DEEP |
| L2 | 69" WIDE X 69" HIGH | 94" WIDE X 26" HIGH 84" DEEP |
| R2 | 94" WIDE X 69" HIGH | 97" WIDE X 64" HIGH 84" DEEP |
| L3 & R3 | 96" WIDE X 59" HIGH | 48" WIDE X 59" HIGH TUNNEL |
| REAR | 97" WIDE X 44" HIGH | 97" WIDE X 44" HIGH 84" DEEP |